Ad Soyad:_____

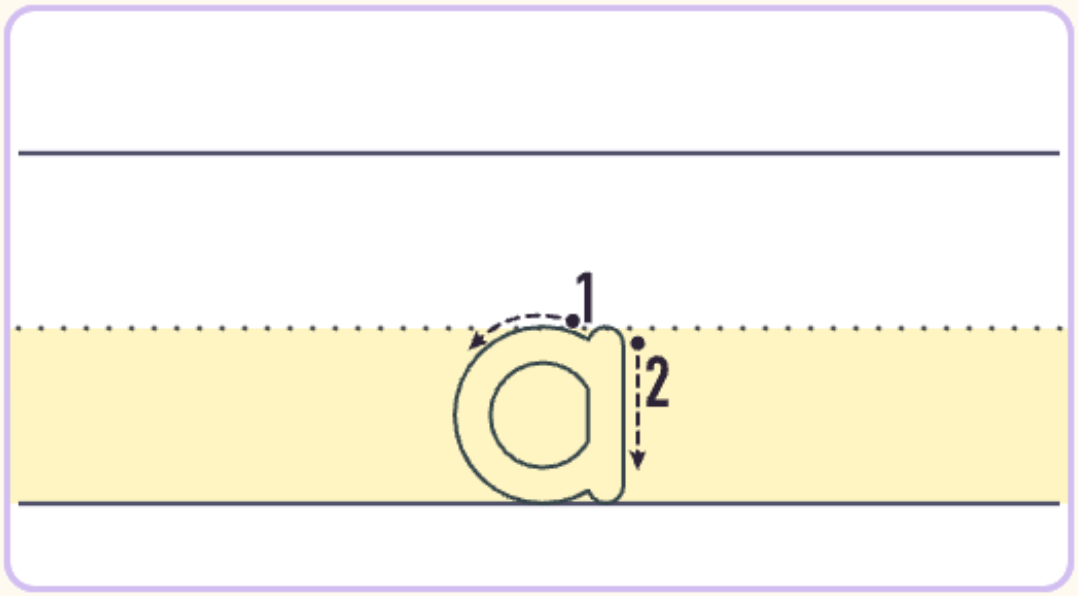



a

a

a

a

a

a

a

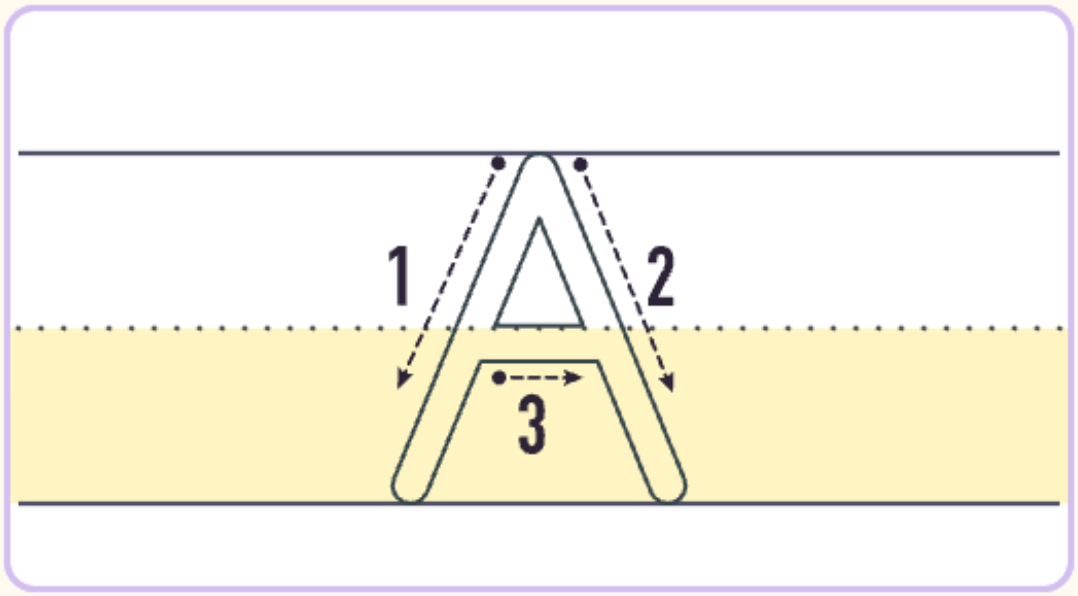



A

A

A

A

A

A

A

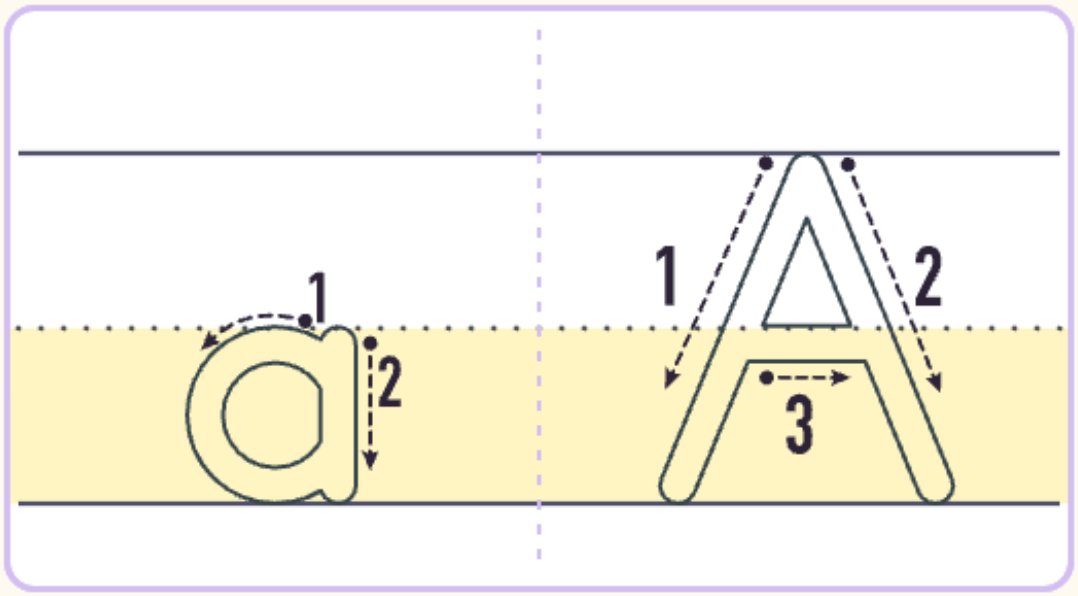



a A a A a A a A

a A a A a A a A

a A a A a A a A

a A a A a A a A

a A a A a A a A

a A a A a A a A

a A a A a A a A