Ad Soyad:_____

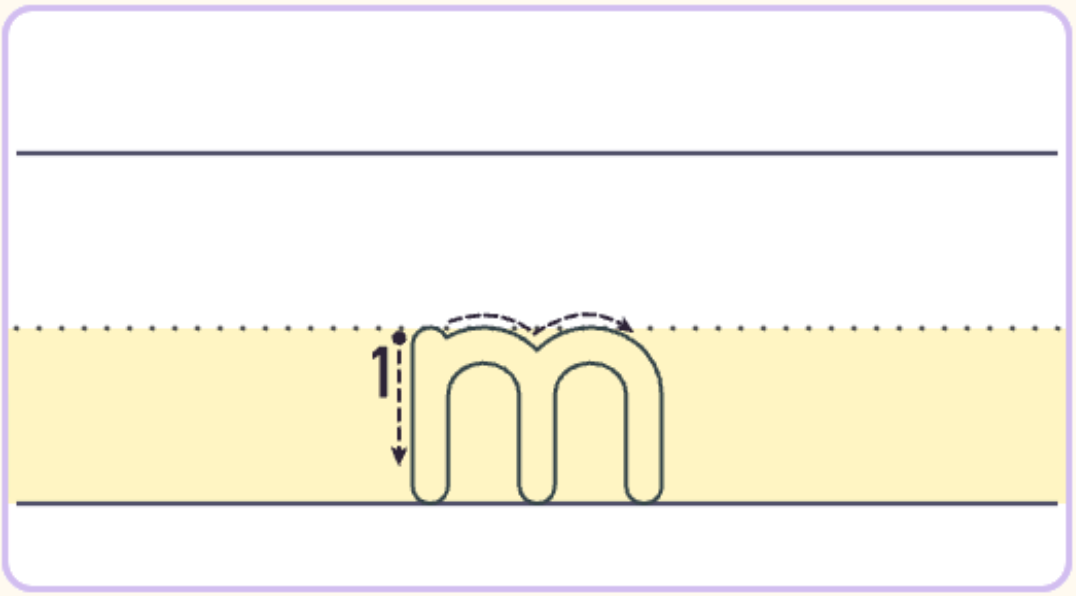



m

m

m

m

m

m

m

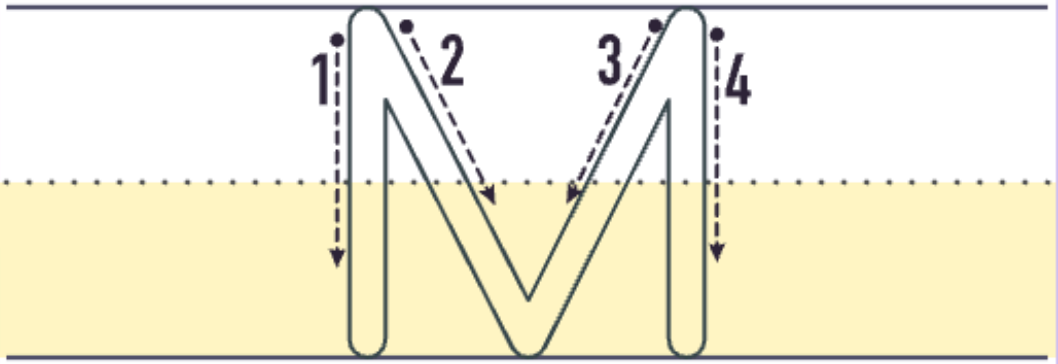



M M M M M M M M

M M M M M M M M

M M M M M M M M

M M M M M M M M

M M M M M M M M

M M M M M M M M

M M M M M M M M

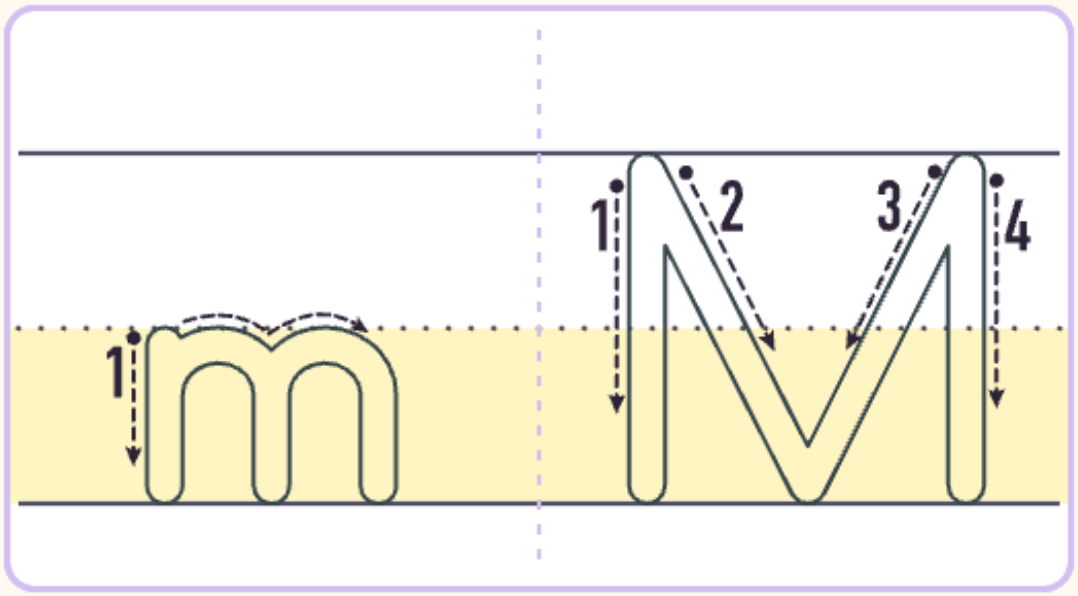



m M m M m M

m M m M m M

m M m M m M

m M m M m M

m M m M m M

m M m M m M